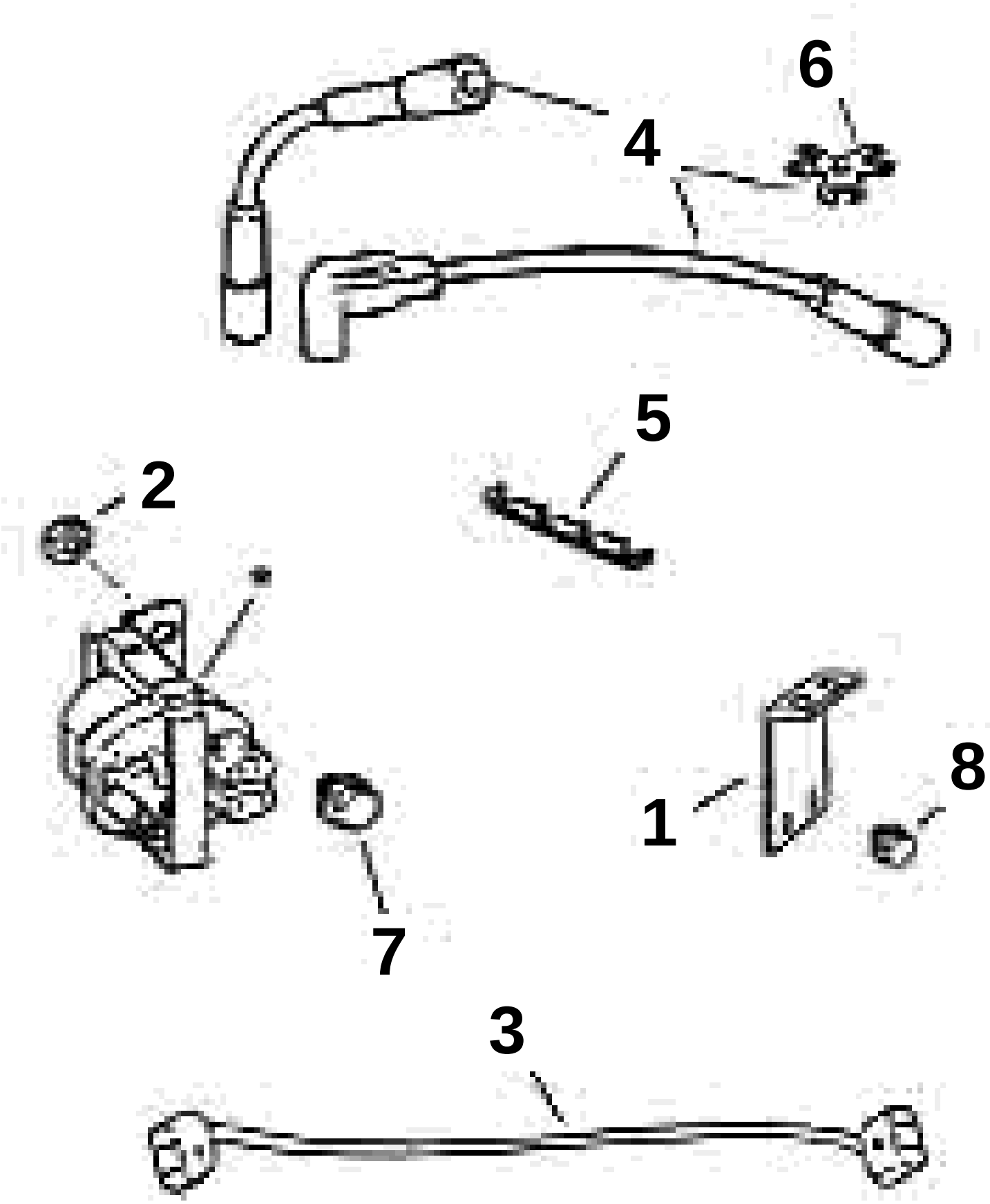
6
4
5
2
8
1
7
3

IGNITION COIL & LEADS - 5.7Gi

REF	PART NO.	QTY	DESCRIPTION
	3854002	1	Ignition coil
1	3850429	1	Bracket, Coil
2	3852051	2	Nut, Coil bracket
3	3854084	1	Cable, Distributor to coil
4	3851820	1	Ignition cable kit, High tension leads
5	3852491	1	· Retainer, 4 wire
6	3852492	1	· Retainer, 3 wire
7	3853325	2	Screw, Coil bracket
8	3850753	1	Screw, Coil bracket to housing